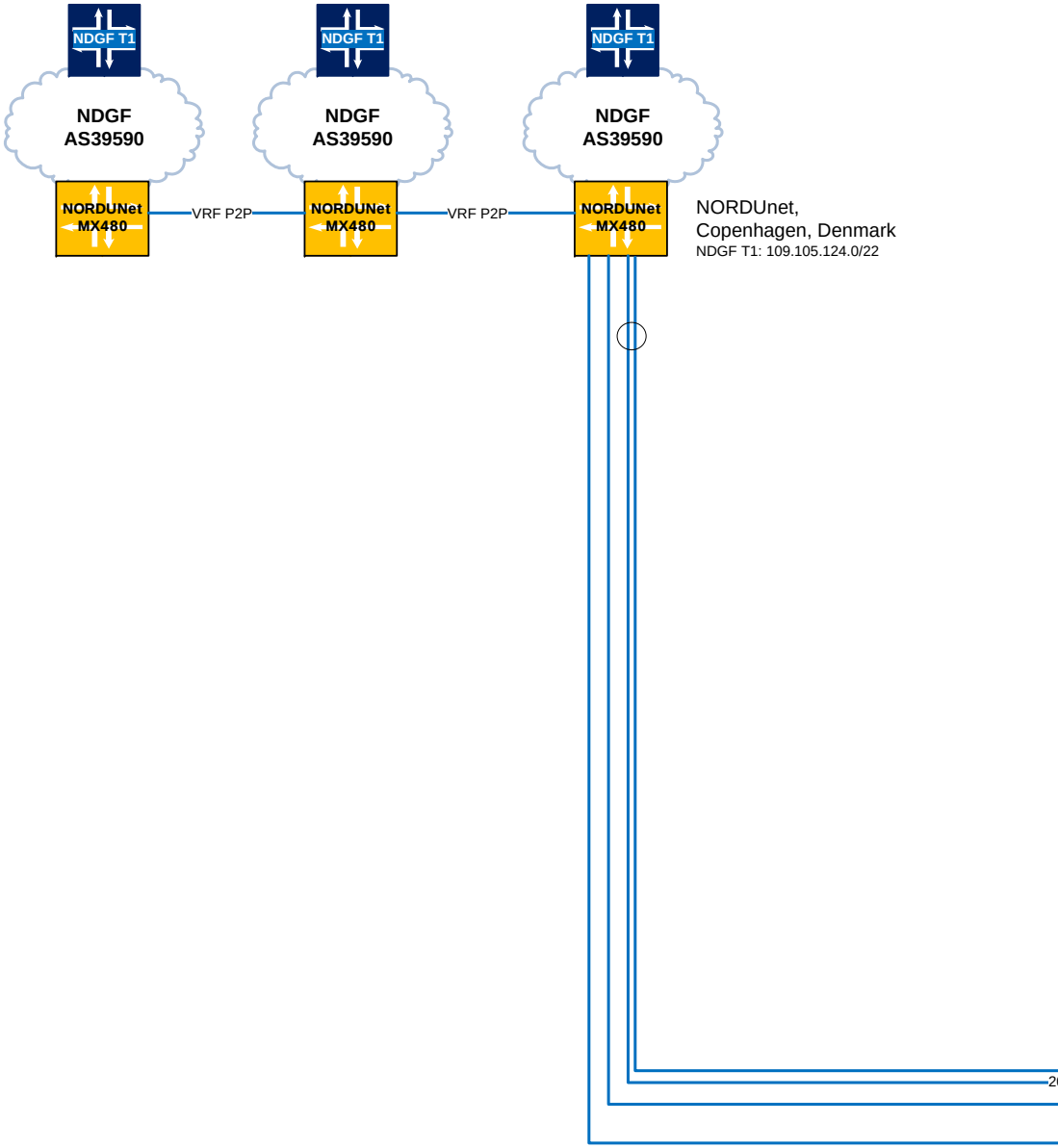
NDGF T1
NDGF
AS39590
NORDUNet
MX480
VRF P2P
NDGF T1
NDGF
AS39590
NORDUNet
MX480
VRF P2P
NDGF T1
NDGF
AS39590
NORDUNet
MX480
NORDUnet,
Copenhagen, Denmark
NDGF T1: 109.105.124.0/22

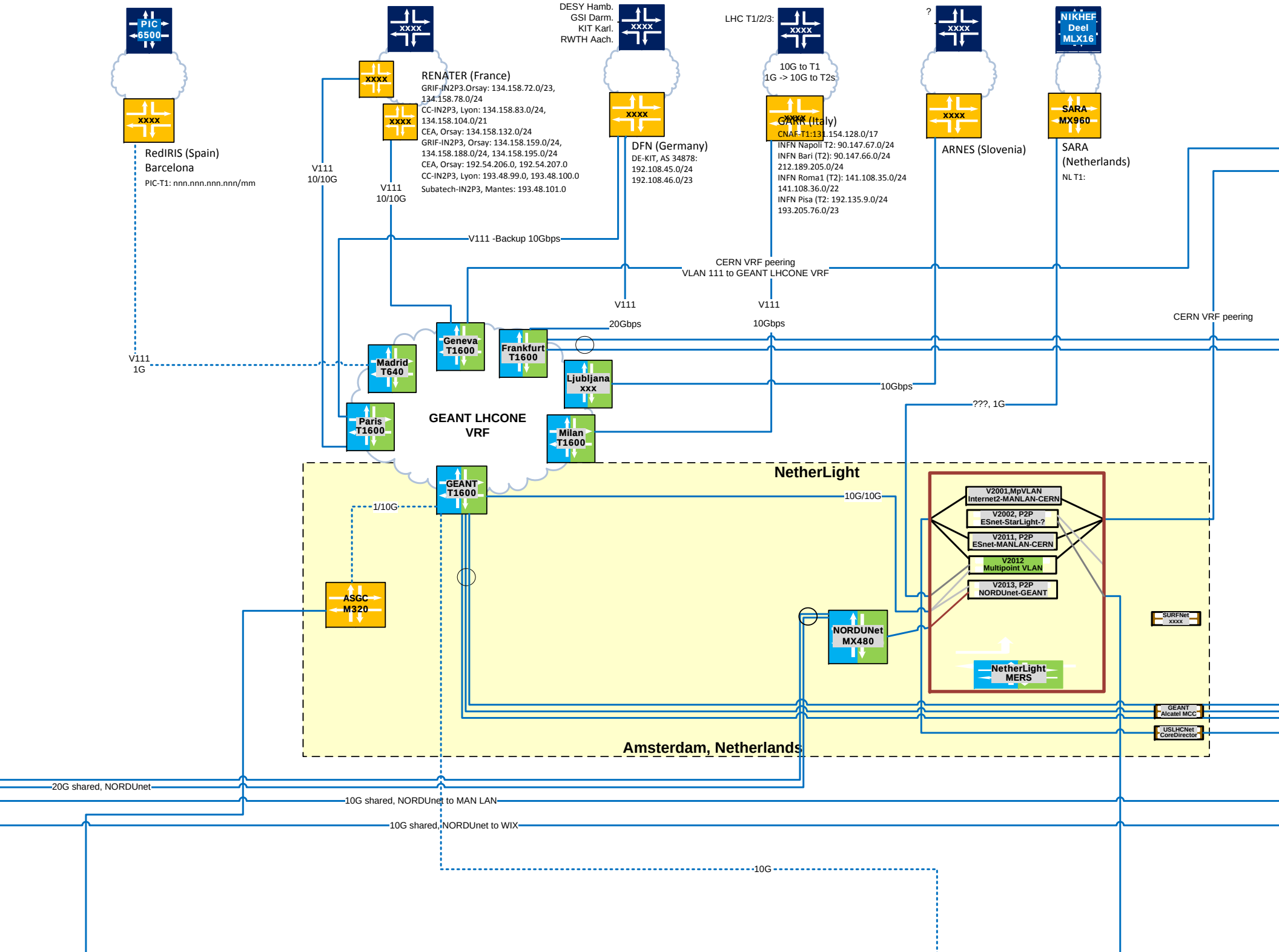
PIC
6500
xxxx
RedIRIS (Spain)
Barcelona
PIC-T1: nnn.nnn.nnn.nnn/mm
V111
10/10G
V111
1G
xxxx
xxxx
RENATER (France)
GRIF-IN2P3.Orsay: 134.158.72.0/23, 134.158.78.0/24
CC-IN2P3, Lyon: 134.158.83.0/24, 134.158.104.0/21
CEA, Orsay: 134.158.132.0/24
GRIF-IN2P3, Orsay: 134.158.159.0/24, 134.158.188.0/24, 134.158.195.0/24
CEA, Orsay: 192.54.206.0, 192.54.207.0
CC-IN2P3, Lyon: 193.48.99.0, 193.48.100.0
Subatech-IN2P3, Mantes: 193.48.101.0
V111
10/10G
DESY Hamb.
GSI Darm.
KIT Karl.
RWTH Aach.
xxxx
xxxx
DFN (Germany)
DE-KIT, AS 34878:
192.108.45.0/24
192.108.46.0/23
LHC T1/2/3:
xxxx
10G to T1
1G -> 10G to T2s
xxxx
GARR (Italy)
CNAF-T1:131.154.128.0/17
INFN Napoli T2: 90.147.67.0/24
INFN Bari (T2): 90.147.66.0/24
212.189.205.0/24
INFN Roma1 (T2): 141.108.35.0/24
141.108.36.0/22
INFN Pisa (T2: 192.135.9.0/24
193.205.76.0/23
?
xxxx
xxxx
ARNES (Slovenia)
NIKHEF
Deel
MLX16
SARA
MX960
SARA
(Netherlands)
NL T1:
V111 -Backup 10Gbps
CERN VRF peering
VLAN 111 to GEANT LHCONE VRF
V111
20Gbps
V111
10Gbps
CERN VRF peering
Geneva
T1600
Frankfurt
T1600
Madrid
T640
Ljubljana
xxx
10Gbps
???, 1G
Paris
T1600
GEANT LHCONE
VRF
Milan
T1600
GEANT
T1600
NetherLight
10G/10G
1/10G
V2001,MpVLAN
Internet2-MANLAN-CERN
V2002, P2P
ESnet-StarLight-?
V2011, P2P
ESnet-MANLAN-CERN
V2012
Multipoint VLAN
V2013, P2P
NORDUnet-GEANT
ASGC
M320
NORDUNet
MX480
SURFNet
xxxx
NetherLight
MERS
GEANT
Alcatel MCC
USLHCNet
CoreDirector
Amsterdam, Netherlands
20G shared, NORDUnet
10G shared, NORDUnet to MAN LAN
10G shared, NORDUnet to WIX
10G

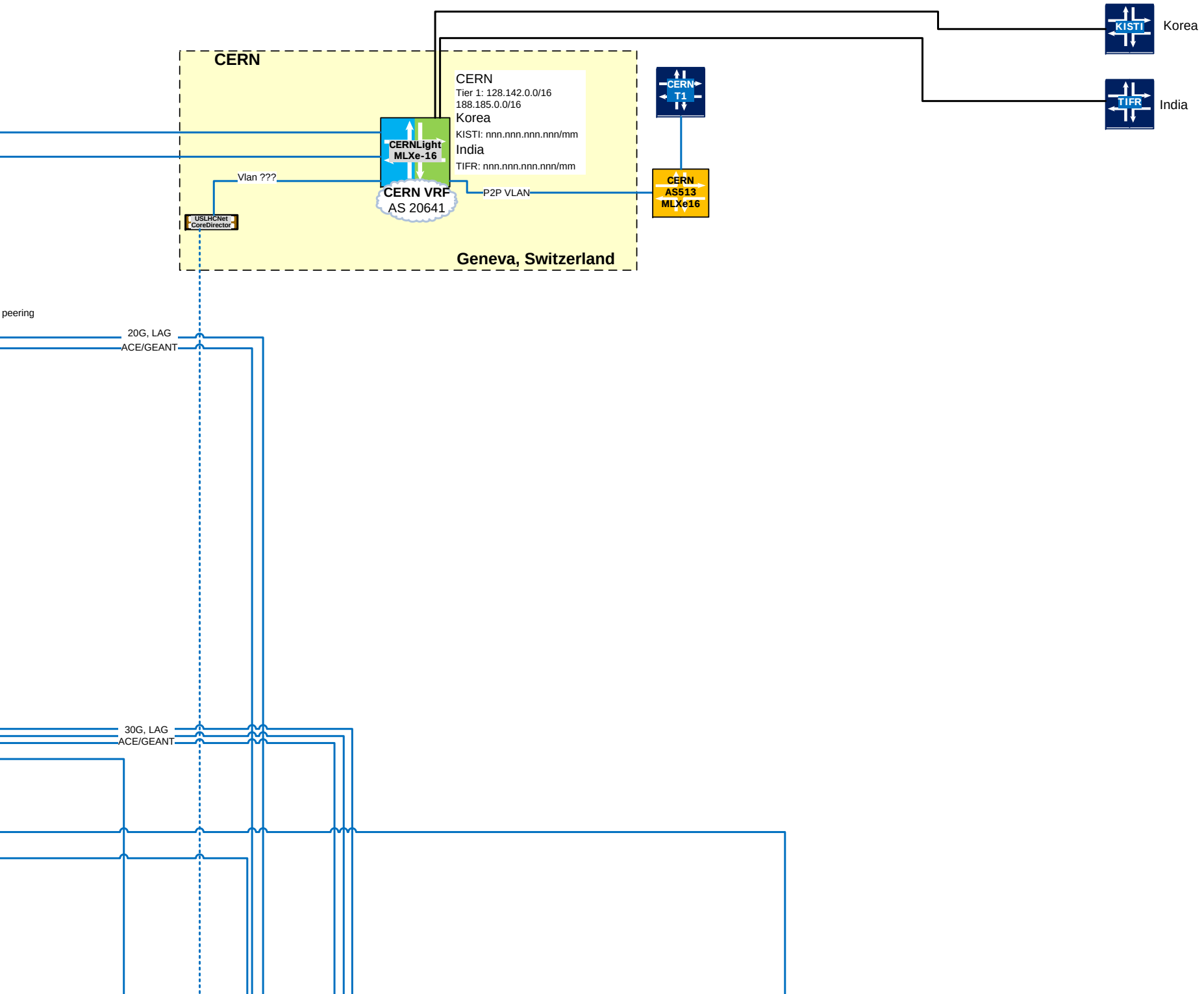
CERN
CERN
Tier 1: 128.142.0.0/16
188.185.0.0/16
Korea
KISTI: nnn.nnn.nnn.nnn/mm
India
TIFR: nnn.nnn.nnn.nnn/mm
CERNLight
MLXe-16
CERN VRF
AS 20641
Vlan ???
P2P VLAN
USLHCNet
CoreDirector
CERN
T1
CERN
AS513
MLXe16
Geneva, Switzerland
KISTI
Korea
TIFR
India
peering
20G, LAG
ACE/GEANT
30G, LAG
ACE/GEANT

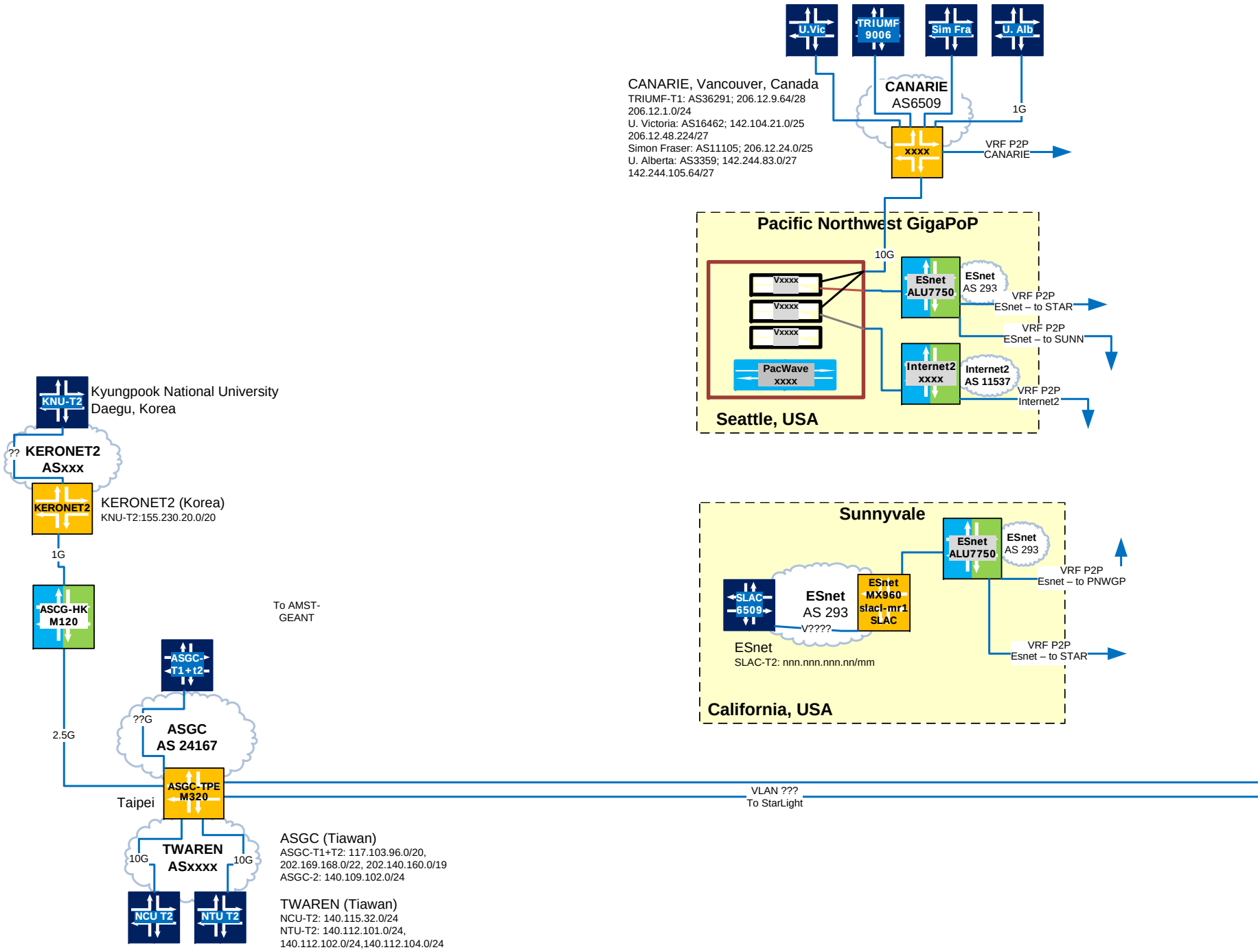
U.Vic
TRIUMF 9006
Sim Fra
U. Alb
CANARIE, Vancouver, Canada
TRIUMF-T1: AS36291; 206.12.9.64/28
206.12.1.0/24
U. Victoria: AS16462; 142.104.21.0/25
206.12.48.224/27
Simon Fraser: AS11105; 206.12.24.0/25
U. Alberta: AS3359; 142.244.83.0/27
142.244.105.64/27
CANARIE
AS6509
1G
xxxx
VRF P2P
CANARIE
Pacific Northwest GigaPoP
10G
Vxxxx
Vxxxx
Vxxxx
PacWave
xxxx
ESnet
ALU7750
ESnet
AS 293
VRF P2P
ESnet – to STAR
VRF P2P
ESnet – to SUNN
Internet2
xxxx
Internet2
AS 11537
VRF P2P
Internet2
Seattle, USA
Sunnyvale
ESnet
ALU7750
ESnet
AS 293
VRF P2P
Esnet – to PNWGP
SLAC
6509
ESnet
AS 293
V????
ESnet
MX960
slacl-mr1
SLAC
ESnet
SLAC-T2: nnn.nnn.nnn.nn/mm
VRF P2P
Esnet – to STAR
California, USA
KNU-T2
Kyungpook National University
Daegu, Korea
?? KERONET2
ASxxx
KERONET2
KERONET2 (Korea)
KNU-T2:155.230.20.0/20
1G
ASCG-HK
M120
To AMST-
GEANT
ASGC-
T1+t2
??G
ASGC
AS 24167
2.5G
ASGC-TPE
M320
Taipei
VLAN ???
To StarLight
10G
TWAREN
ASxxxx
10G
NCU T2
NTU T2
ASGC (Tiawan)
ASGC-T1+T2: 117.103.96.0/20,
202.169.168.0/22, 202.140.160.0/19
ASGC-2: 140.109.102.0/24
TWAREN (Tiawan)
NCU-T2: 140.115.32.0/24
NTU-T2: 140.112.101.0/24,
140.112.102.0/24,140.112.104.0/24

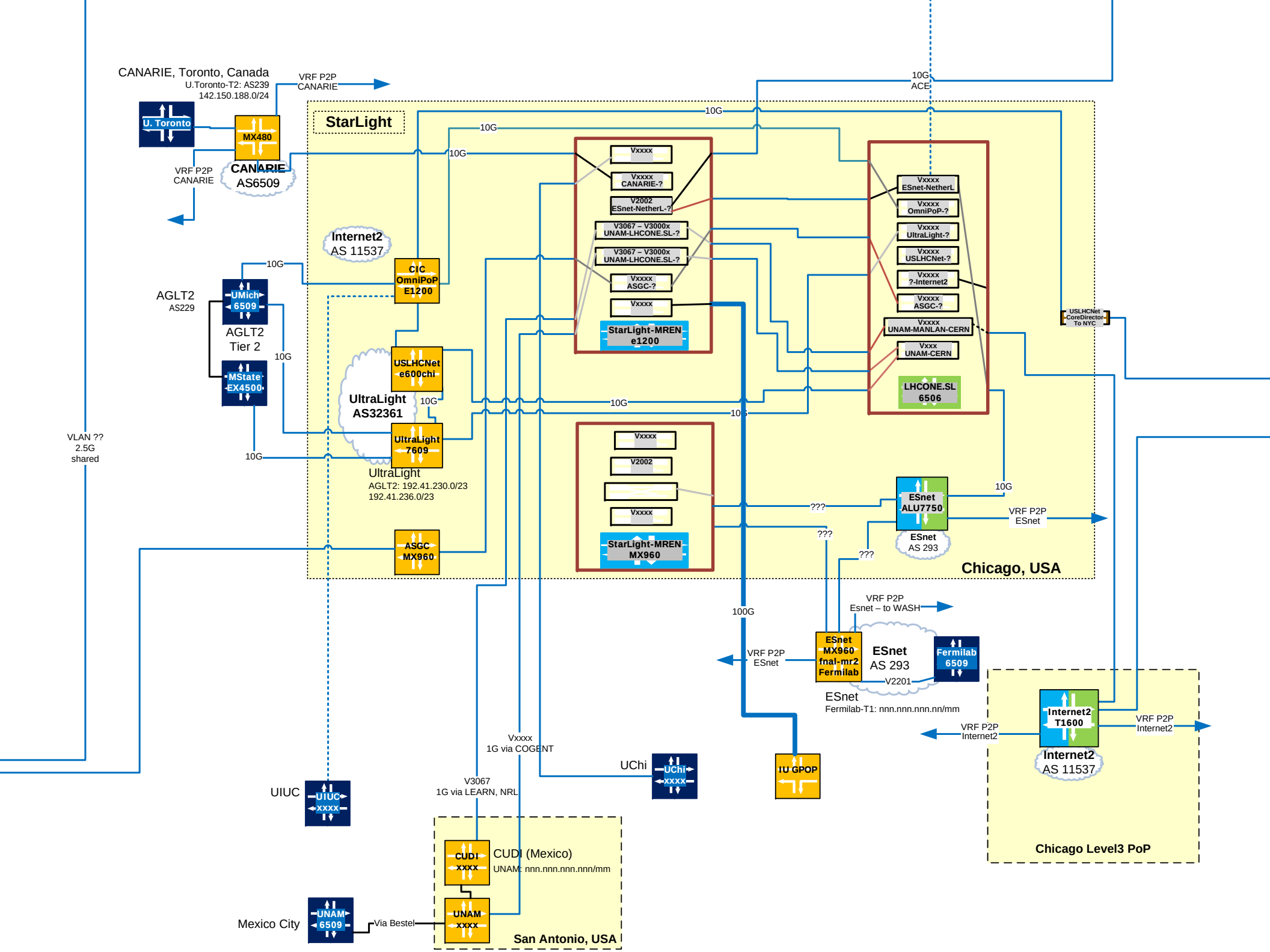
CANARIE, Toronto, Canada
U.Toronto-T2: AS239
142.150.188.0/24
VRF P2P
CANARIE
U. Toronto
MX480
CANARIE
AS6509
VRF P2P
CANARIE
10G
ACE
StarLight
10G
10G
10G
Vxxxx
Vxxxx
CANARIE-?
V2002
ESnet-NetherL-?
V3067 – V3000x
UNAM-LHCONE.SL-?
V3067 – V3000x
UNAM-LHCONE.SL-?
Vxxxx
ASGC-?
Vxxxx
StarLight-MREN
e1200
Vxxxx
ESnet-NetherL
Vxxxx
OmniPoP-?
Vxxxx
UltraLight-?
Vxxxx
USLHCNet-?
Vxxxx
?-Internet2
Vxxxx
ASGC-?
Vxxxx
UNAM-MANLAN-CERN
Vxxx
UNAM-CERN
LHCONE.SL
6506
USLHCNet
CoreDirector
To NYC
Internet2
AS 11537
CIC
OmniPoP
E1200
10G
AGLT2
AS229
UMich
6509
AGLT2
Tier 2
MState
EX4500
10G
10G
USLHCNet
e600chi
UltraLight
AS32361
10G
UltraLight
7609
10G
10G
10G
VLAN ??
2.5G
shared
UltraLight
AGLT2: 192.41.230.0/23
192.41.236.0/23
Vxxxx
V2002
Vxxxx
StarLight-MREN
MX960
???
???
???
ESnet
ALU7750
ESnet
AS 293
10G
VRF P2P
ESnet
Chicago, USA
ASGC
MX960
100G
VRF P2P
Esnet – to WASH
VRF P2P
ESnet
ESnet
MX960
fnal-mr2
Fermilab
ESnet
AS 293
V2201
Fermilab
6509
ESnet
Fermilab-T1: nnn.nnn.nnn.nn/mm
Internet2
T1600
VRF P2P
Internet2
VRF P2P
Internet2
Internet2
AS 11537
Chicago Level3 PoP
Vxxxx
1G via COGENT
UChi
UChi
XXXX
IU GPOP
V3067
1G via LEARN, NRL
UIUC
UIUC
XXXX
CUDI
XXXX
CUDI (Mexico)
UNAM: nnn.nnn.nnn.nnn/mm
UNAM
XXXX
San Antonio, USA
Mexico City
UNAM
6509
Via Bestel

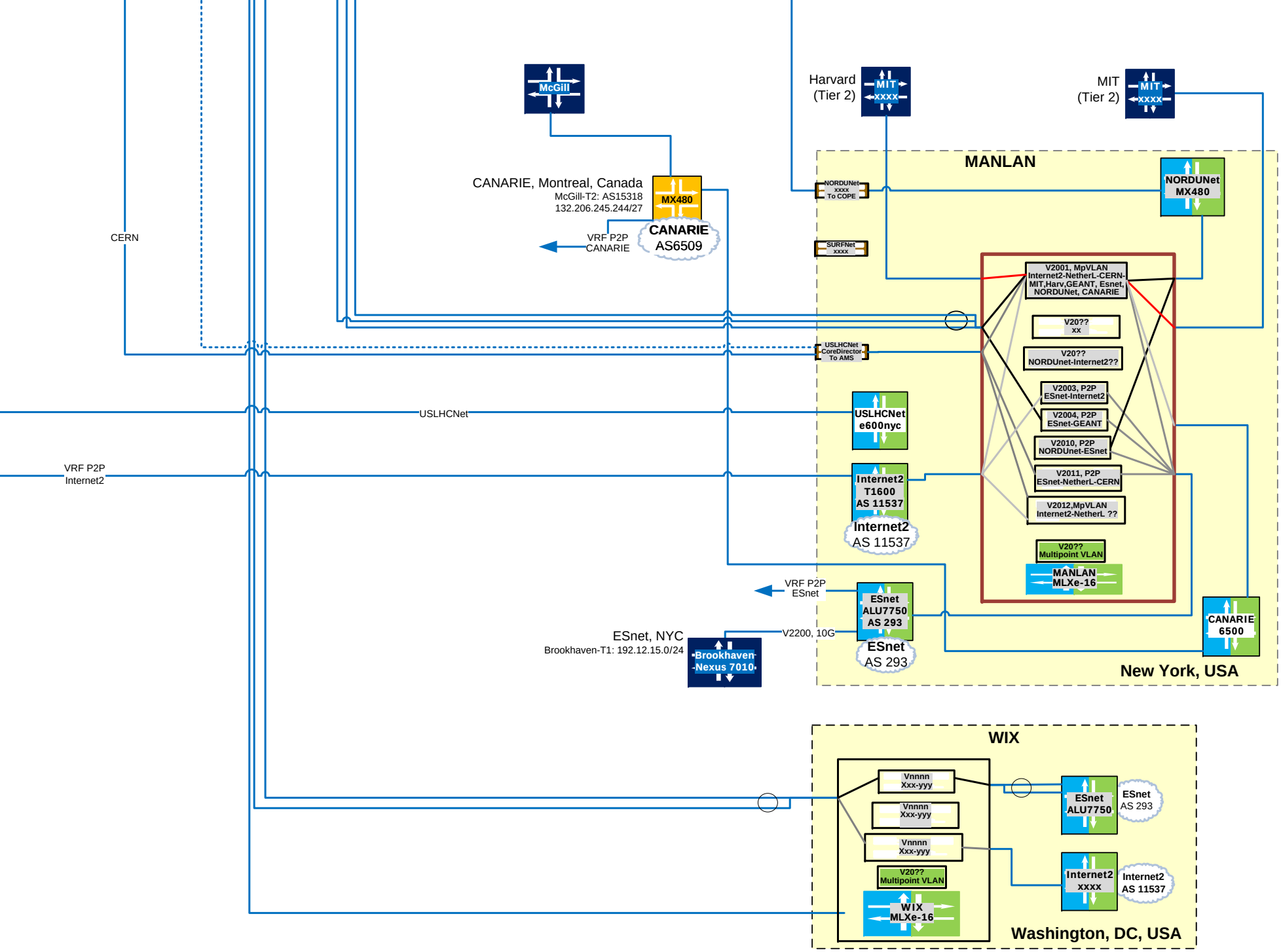

LHCONE, July 29, 2012